Computer Engineering Curriculum Flow Chart

Year 2008/2009
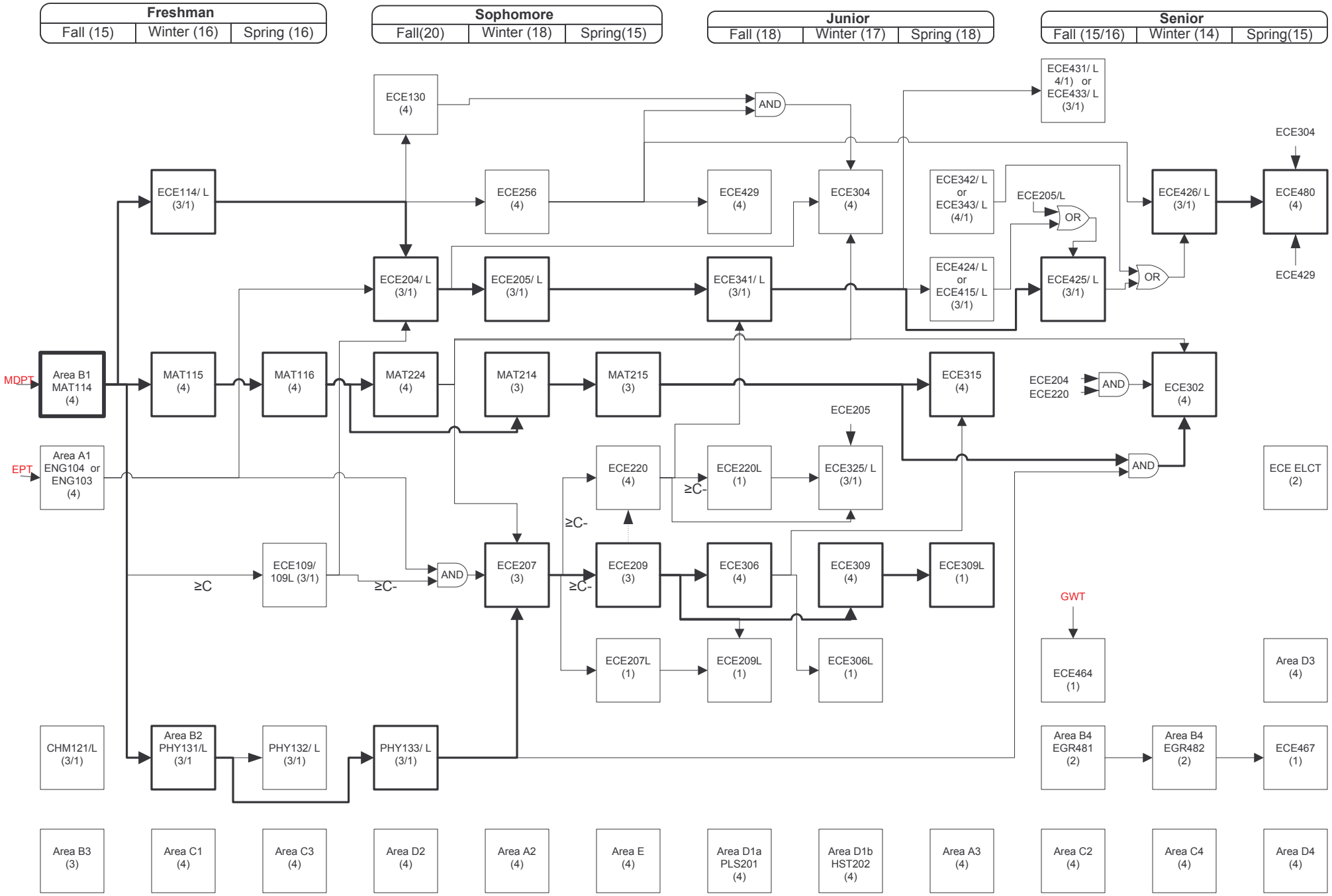
Name:_____